Thule EuroClassic G6

928

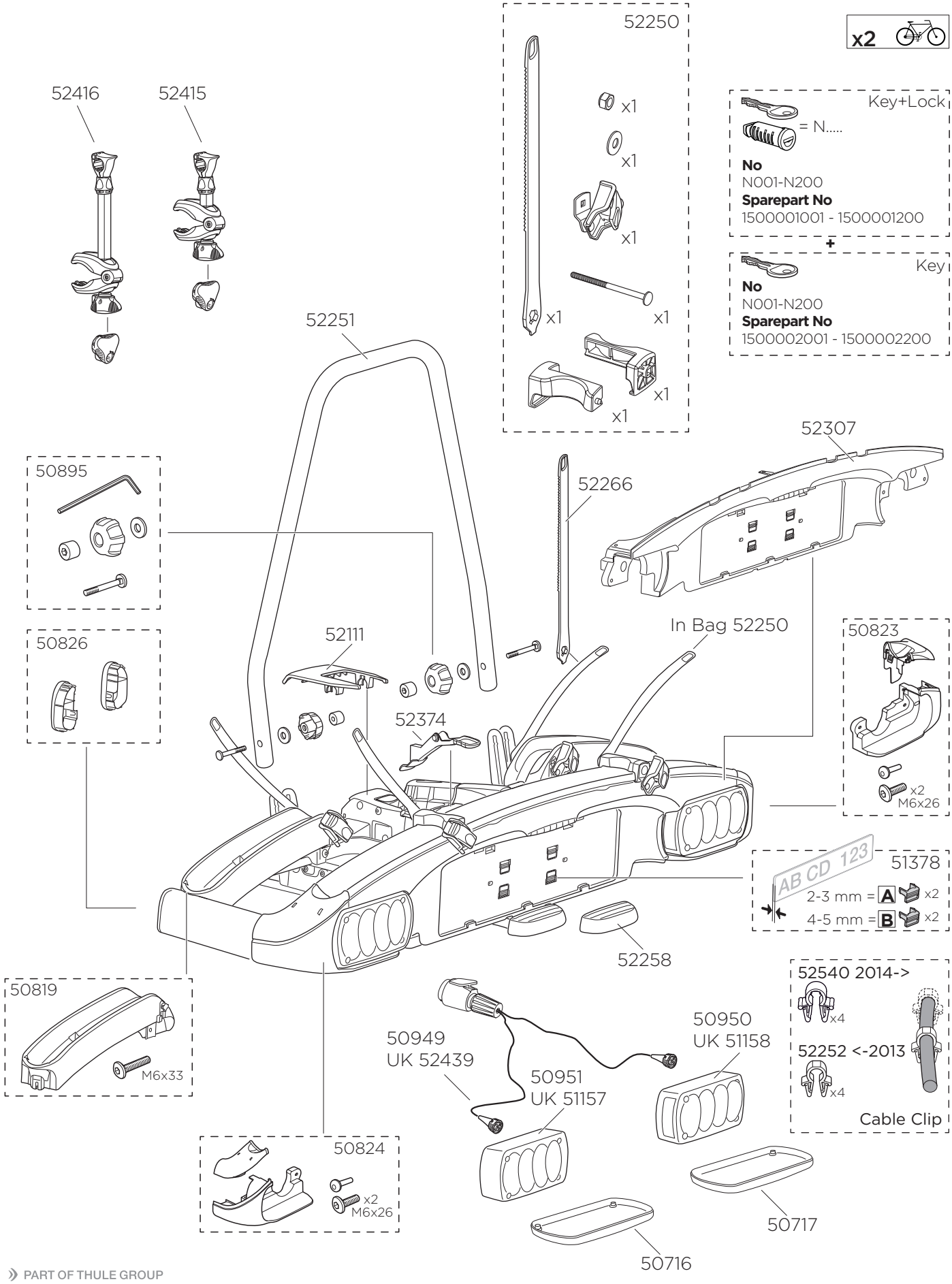

PART OF THULE GROUP